75550

STATE OF NEVADA
CERTIFICATE OF MINING LOCATION
LODE CLAIM ON PUBLIC DOMAIN

NOTICE IS HEREBY GIVEN that the Twin No. 22 lode mining claim has been located by AMERICAN SELCO INC. a New York corporation, whose address is 90 West Grove Street, Suite 100, Reno, Nevada 89509. The general course of this claim is North/South. This claim is 1500 feet in length along the course of the claim, being 1490 feet from the point of discovery in a North direction to the North end line of this claim, and 10 feet in a South direction to the South end line of the claim. This claim is 600 feet in width, being 300 feet in width on each side of the center line of the claim.

This claim is located within the SW Quarter of Section 31, Township 19 North, Range 50 East, Mount Diablo Base and Meridian, unknown Mining District, Eureka County, Nevada. The location monument of this claim is situated with reference to some natural object or permanent monument as follows: Corner no. 1 of this claim is located approximately 6800 feet N 77 °E from the located SW corner section 36 T19N R49E MDM

The corners of this claim are marked by 4"x4" posts or 4" trees with metal tags inscribed with the appropriate corner number as shown on the following sketch and the accompanying claim map.

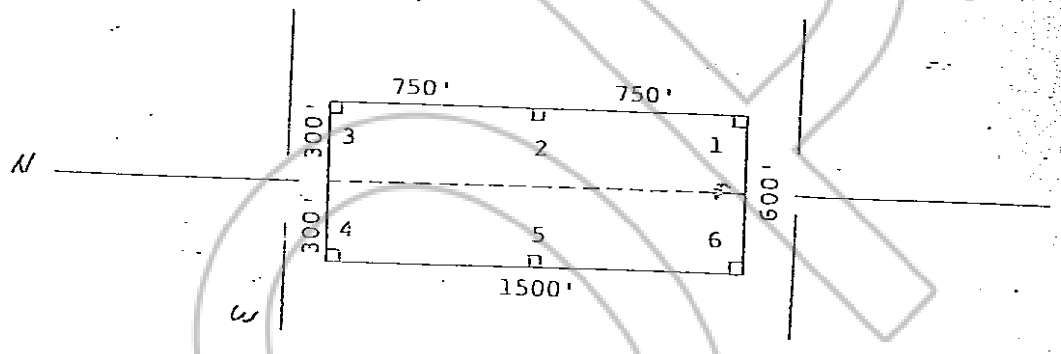

The location work consisted of making the maps as provided in NRS 517.040.

Dated and posted on the ground this 23 day of May, 19 80

Witnesses:

Locator:

AMERICAN SELCO INC.

By
Agent for
American Selco Inc.

STATE OF NEVADA)
)ss.
COUNTY OF)

I hereby certify that the within instrument was filed and recorded at the request of:
FILE NO.
on
at
Docket Page

RECORDED AT REQUEST OF American Selco Inc.
BOOK 85 PAGE 209
80 AUG 22 A11:26
OFFICIAL RECORDS
EUREKA COUNTY NEVADA
WILLIS A. DEPAOLI RECORDER
File No. 75550
Fee 3.00