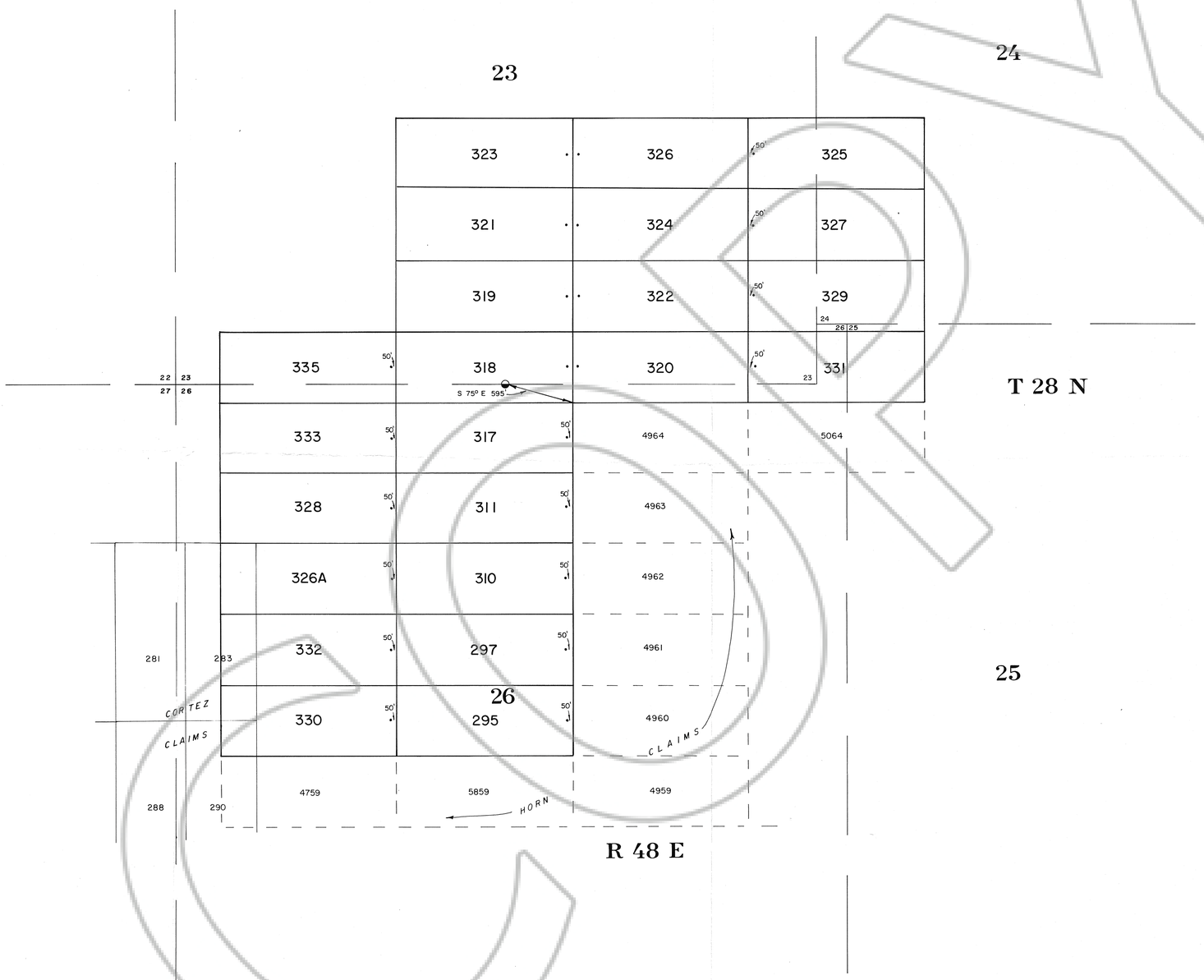

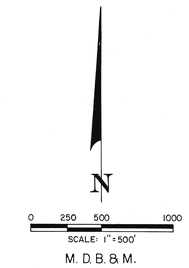

TYPICAL CLAIM & CORNER NUMBERS

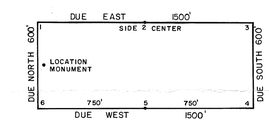

ALL CLAIMS ARE 1500' x 600'.

LOCATION MONUMENTS ARE 25' IN FROM THE END CENTER EXCEPT WHERE NOTED.

ALL CLAIM CORNERS, SIDE CENTERS & LOCATION MONUMENTS ARE EITHER 4"x 4"x 4' WOOD POSTS OR 3" PVC PIPE.

◒ DENOTES A FOUND 1/4 CORNER.

LOCATION DATES

MARCH 28, 1992 — — 295, 297, 310, 311, 317-324
— — — — 326, 326A, 328, 330, 332, 333, 335
MARCH 29, 1992 — — — — 325, 327, 329, 331

FILED AT THE REQUEST OF Idora Silver Mines
on June 5 1992, at 33 mins. past 11 A M.
RECORDS of EUREKA COUNTY, NEVADA M. N. REBALEATI, Recorder
File No. ~~131140~~ Fee $ 345

CORTEZ LODE MINING CLAIMS

NO'S. 295, 297, 310, 311, 317-333, 335 & 326A
SECS. 23-26, T 28 N, R 48 E, M.D.B.&M.
EUREKA COUNTY, NEVADA

OWNER:
IDORA SILVER MINES, INC.
P.O. BOX 488
COEUR D'ALENE IDAHO 83814

131140