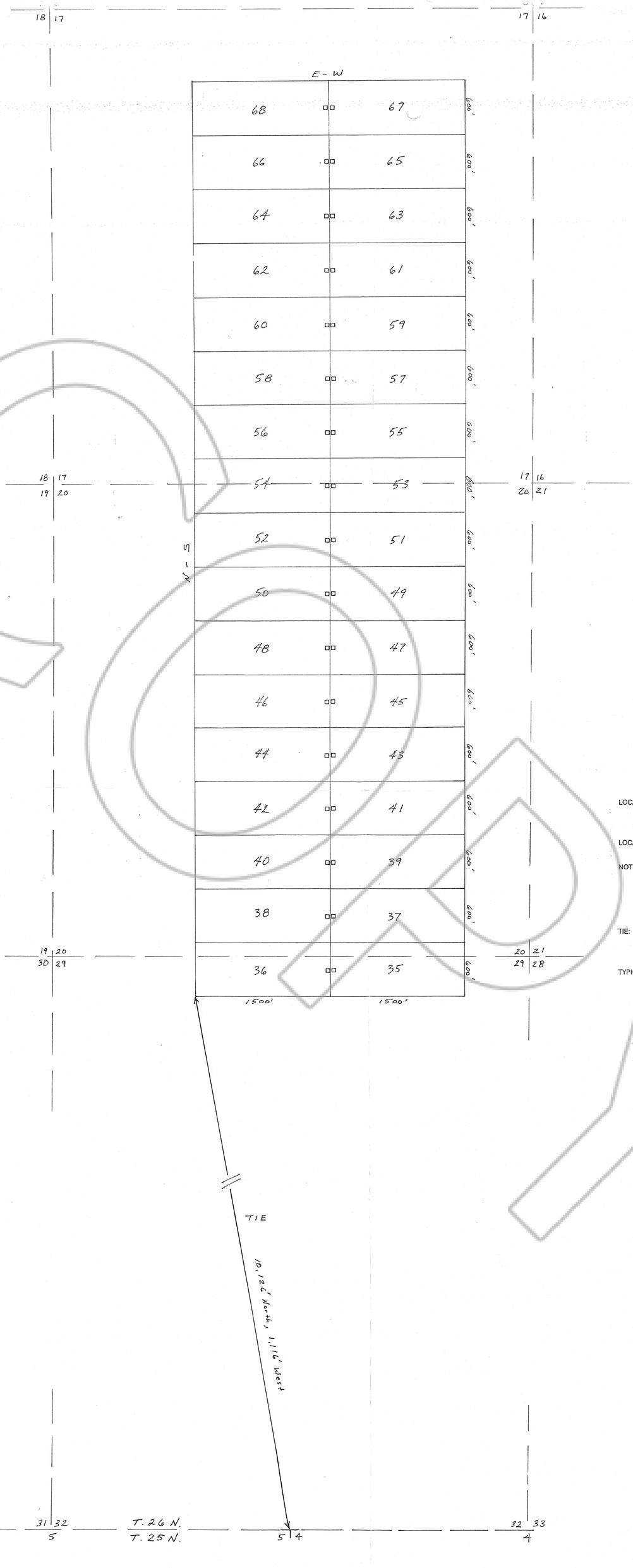

LOCATOR: TECK RESOURCES INC.
P.O. Box 10510
Reno, Nevada 89510

LOCATION DATE: GAVEL 35 - 68 March 31, 1995

NOTES: All claims measure 600' by 1500'.

All location monuments depicted as "□" are set 20 ft. into the claim.

All monuments are 2" X 2" X 4' wooden posts.

TIE: The southwest corner of GAVEL 36 is approximately 10,126' North and 1,116' West of the northeast corner of Section 4, T. 25 N., R. 48 E. M.D.B.M.

TYPICAL CLAIM:

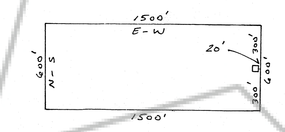

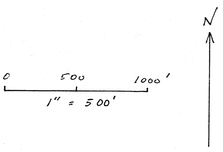

TECK RESOURCES INC.

GAVEL 35 - 68

Lode Mining Claims

Secs. 17, 20, and 29, T.26 N., R.48 E., M.D.B.M.

Eureka County, Nevada

FILED AT THE REQUEST OF Teck Resources
on Apr 11 19 95, at 52 mins. past 11 A.M.
RECORDS OF EUREKA COUNTY, NEVADA M. N. REBALEATI, Recorder
File No. 157545 Fee $510.00