172378

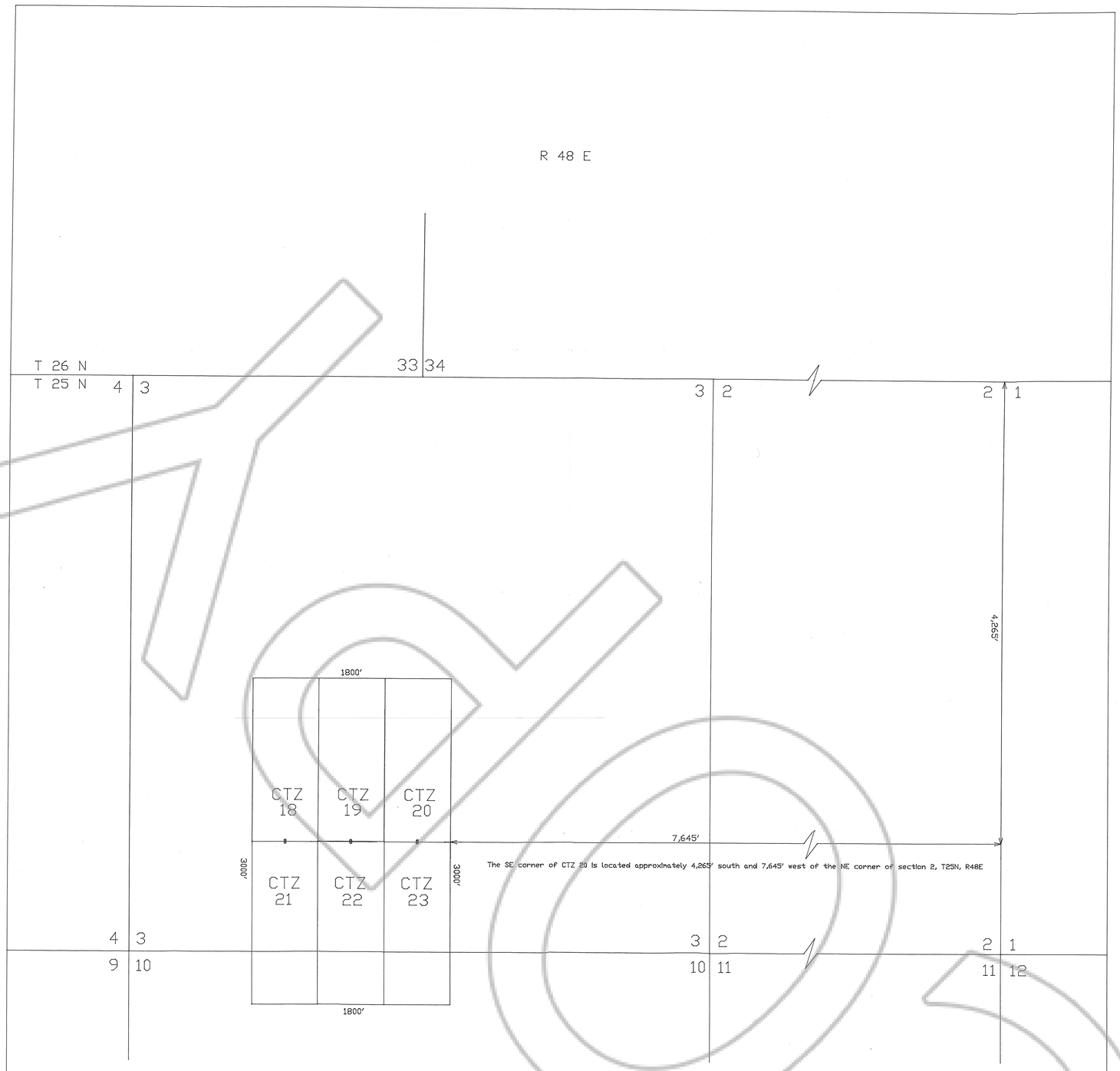

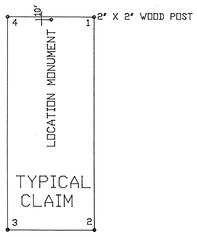

ALL CLAIMS ARE 1500' x 600' UNLESS OTHERWISE NOTED.

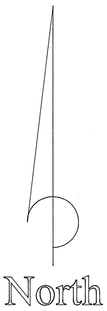

SCALE

500 0 500 1000 1500

FEET

LOCATOR: NEVADA GOLD EXPLORATION, INC.
1475 GREG STREET
SPARKS, NEVADA 89431

LOCATION DATE: CTZ 18-23 JULY 9, 1999

TIE POINT: The SE corner of CTZ 20 is located approximately 4,265' south and 7,645' west of the NE corner of Section 2, T25N, R48E, MDBM

LOCATION: PROJECTED SECTIONS 3, 10, T25N, R48E, MDBM, EUREKA COUNTY, NEVADA

LODE CLAIM MAP
CTZ 18-23

Nevada Gold Exploration, Inc.
1475 Greg Street
Sparks, Nevada 89431

DRAWN BY:	DATE:	SCALE:	
A.D.	7/13/99	1"=500'	SHEET 1 of 1

Mineral Exploration Services, Ltd., 3545 Airway Dr., #106, Reno, NV 89511

FILED AT THE REQUEST OF Nevada Gold Exploration
on July 22 19 99, at 39 mins. past 12 M.
RECORDED IN EUREKA COUNTY, NEVADA M. N. REBALATI, Recorder
File No. 172378 Fee $ 10.00